KLINGER Sweden

KLINGER SCHÖNEBERG

Industrial Valves





www.klinger.se

KLINGER GROUP

Visionary through tradition

KLINGER is one of the world's leading manufacturers and distributors of state of the art Sealing, Fluid Control and Instrumentation solutions. A pioneer in gasket technology, KLINGER was founded in 1886 and is a family owned business.

Today KLINGER is a global group with roughly 40 companies providing their partners with unique expertise and professional advice at 60+ manufacturing, distribution and service sites worldwide. This long-established company counts leading business from the petrochemical, chemical, infrastructure and transport industries as its customers. KLINGER employs roughly 2,400 people worldwide and has an annual turnover of approximately 520 million Euros.

€ 520 Mio.
annual sales

2,400
employees

2,400 employees work for the KLINGER Group worldwide

80
countries of the world to which the Group has already exported

18
production locations worldwide

for seals, valves and instrumentation



60+
countries worldwide hosting subsidiaries or a representative of the KLINGER Group

KLINGER SCHÖNEBERG GMBH

Connect with Quality!

KLINGER SCHÖNEBERG GmbH is a flexible, medium-sized company with a focus on the research, development, production and distribution of industrial valves, especially ball valves and pneumatic actuators.

Bases on this performance, our “customized products” help us to be a leader in the area of special valves for customers specific problem solutions. Our technical plant engineering knows how makes possible to work closely in project teams together with the customer for the detailed plant engineering of valves.
The wide and depth of our product range is very interesting for our customers to get all different kind of ball valves technique out of one hand acc. their technical demands.

The international character of the worldwide independent KLINGER companies network built up the safety for the worldwide logistics to the locations of our customers.

The location of research, development, production and logistics is in Graben-Neudorf near to Karlsruhe. At our location Graben-Neudorf you will find our buildings on an area of 5,200 m² and the building itself includes our offices, storage and production on an area of 4,200 m².

Over two decades of experience and more than 12,000 different product designs form the basis for a quick response and mutual success.

Quality is not just an optional equipment but a guaranteed product-feature.

Certificates and Approvals:

» Quality-Management acc. to DIN EN ISO 9001:2015
» Certified acc. to API Q1 and 6D
» PED 2014/68/EU, Module H and H1
» WHG §19a approval (water-resources law)
» Allowance for the re-stamping of products by TÜV
» TR CU 010/2011 and TR CU 032/2013 - Russian Gost R Certificate
» CRN certified for all regions of Canada
» TTC - Chinese Type Test Certificate

RESEARCH AND DEVELOPMENT

The heart of the development department is a design department equipped with 7 CAD-work stations. Auto-CAD mechanical (2D-system, current version) as well as Autodesk Inventor (3D-system, current version) are in use. New products are not delivered to customers without thorough testing, as they first have to be approved inhouse under the most realistic possible conditions.

PRODUCTION

We are a traditional German company and manufacture our products in Graben-Neudorf near Karlsruhe. As a result, we can guarantee our customers the highest level of quality. Our machines are state of the art and are operated by the best trained employees.

SALES AND TECHNICAL ADVICE

Sales and technical advice is provided by a highly qualified sales team at KLINGER’s tradition location in Idstein. Our sales representatives are available to provide technical explanations, clarifications and after-sales support.

QUALITY ASSURANCE

The QA department of KLINGER SCHÖNEBERG GmbH currently consist three employees.
The latest CNC technique is in use. NDE tests, such as: PMI, VT and PT are carried out extensively in house.
All relevant test respectively measurement equipment is calibrated and controlled by an independent test laboratory.

KLINGER SCHÖNEBERG

Know-how on local basis

KLINGER Schöneberg is part of the KLINGER Group and is represented around the globe.

We offer our customers a worldwide sale network with longstanding, qualified and competent service and distribution partners. That enables quick service, optimised delivery times and customer-focused services possible on-site.

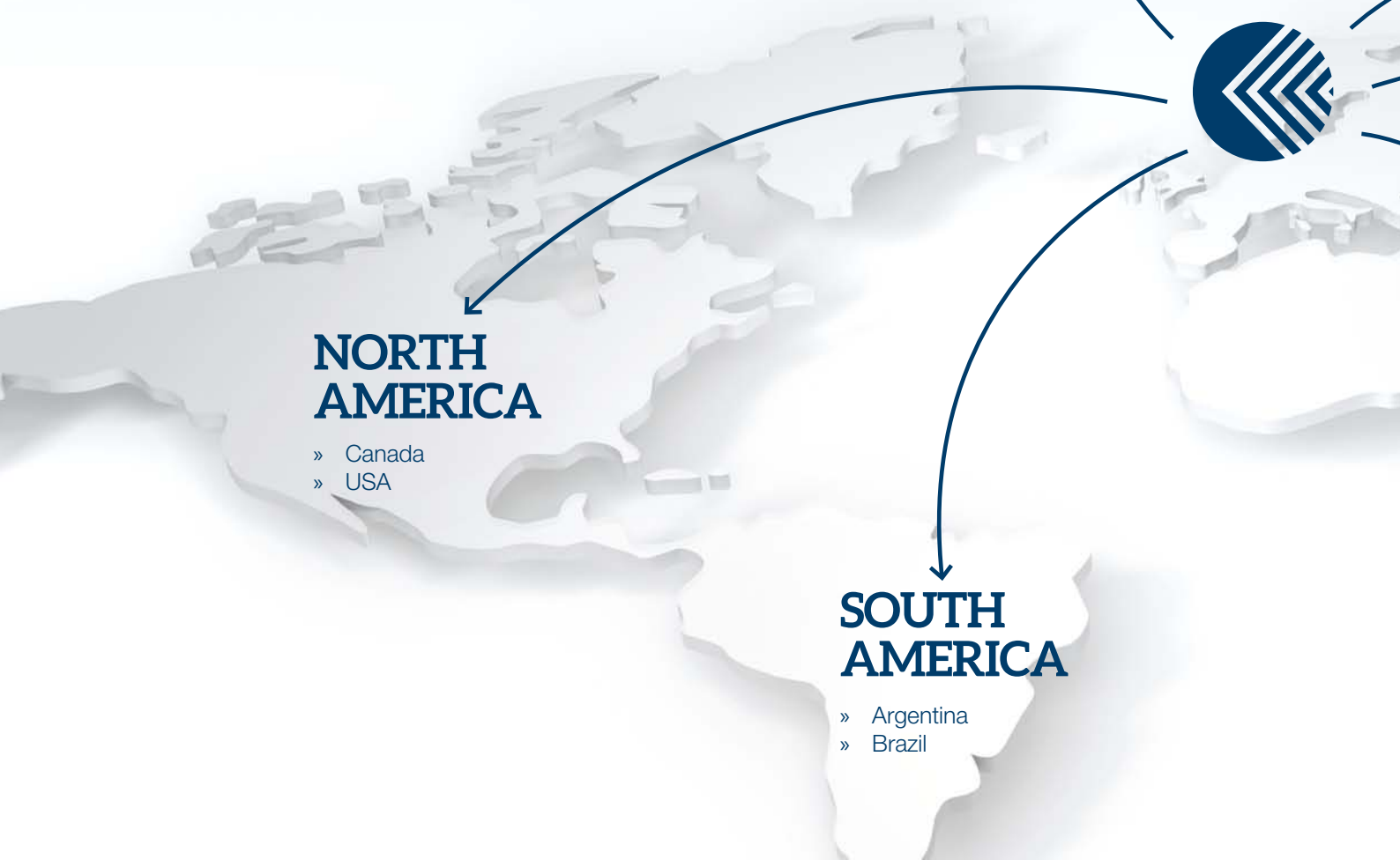

EUROPE

- Austria
- Belgium
- Bulgaria
- Czech Republic
- Denmark
- Finland
- France
- Germany
- Great Britain

NORTH AMERICA

- Canada
- USA

SOUTH AMERICA

- Argentina
- Brazil

INDUSTRY

KLINGER valves help the steel, metal and mineral industries as well as machine builders to increase productivity and process reliability. At the same time, they can also lower many operating and maintenance costs.

CHEMISTRY

Pressure, heat, cold and aggressive media call for reliable products that guarantee zero-fault tolerance. The chemical industry relies on products from KLINGER, which protect the environment through compliance with strict emission regulations.

INFRASTRUCTURE

Outstanding thermal resistance and remarkably long service lives of our products as well as a performance that guarantees integrity and efficiency win over customers in the district heating, water and wastewater industry.

PULP & PAPER

The pulp and paper industry effectively reduces its downtimes and water consumption with KLINGER products. Through our solutions, it is possible to realise increasing production speeds with the highest reliability.

- Greece
- Hungary
- Italy
- Latvia
- Norway
- Poland
- Portugal
- Romania
- Russian Fed.
- Serbia
- Slovakia
- Slovenia
- Spain
- Sweden
- Switzerland
- The Netherlands
- Turkey
- Ukraine



ASIA & PACIFIC

- China
- Hong Kong
- India
- Indonesia
- Japan
- Kazakhstan
- Malaysia
- Pakistan
- Philippines
- Singapore
- South Korea
- Taiwan
- Thailand
- Vietnam

AUSTRALIA

MIDDLE EAST & AFRICA

- Burkina Faso
- Egypt
- Israel
- Ivory Coast
- South Africa
- Turkey
- United Arab Emirates

TRANSPORT

KLINGER valves are reliable and long-lasting. That is valued also by worldwide customers from the automotive sector, because our products stand up to extreme demands, for example in the production of car tyres.

ENERGY

Plant reliability and process-efficiency are decisive guarantees of success. Our customers from the energy sector such as district heating, solar power and electricity generation find the best product for any application.

OIL & GAS

High-quality and pressure-resistant products are required for the manufacture, transport, storage and processing of oil and gas. KLINGER supplies solutions that are used successfully worldwide in all these processes, even under the most extreme climatic and geological conditions.

FOOD & BEVERAGE

The quality, reliability and resilience of KLINGER valves are also convincing in the special area of application found in the food and beverage industry.

INDEX

Series		Marking	Nominal sizes	Page
	**INTEC K100**	Small ball valves	DN 8 - 20	**8**
	**INTEC K200 ff**	2-piece flanged ball valves	DN 15 - 500 NPS ½“ - 20“	**11**
	**INTEC K230 ff**	2-piece flanged ball valves	DN 50 - 500 NPS 2“ - 20“	**16**
	**INTEC K200-K**	Wafer type ball valves	DN 15 - 80	**18**
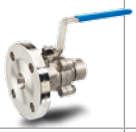	**INTEC K204-S-D**	Steam ball valves	DN 25/20	**20**
	**INTEC K400**	Multiple way ball valves	DN 15 - 150 NPS ½“ - 6“	**22**
	**INTEC K500**	Tank bottom ball valves	DN 80/50 - 200/150	**24**
	**INTEC K600**	Pressure gauge ball valves	DN 4 - 100	**26**
	**INTEC K700**	Sampling device ball valves	DN 15 - 200	**28**
	**INTEC K811**	3-piece high-pressure ball valves	DN 16 - 45	**30**
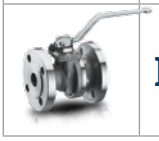	**INTEC**	High-pressure ball valves	DN 15 - 500 NPS ½“ - 20“	**31**

Series		Marking	Nominal sizes	Page
	**TYP 300 P**	Sampling device ball valves	DN ¼“ - 2“	**32**
	**RK-PROBALL**	1-, 2- or 3-piece ball valves	DN 15 - 100 NPS ½“ - 4“	**34**
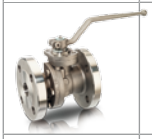	**CHEMOBALL KH2F-CI**	Ball valves for applications in chemical industry	DN 15 - 100	**36**
	**MIG-KS ACTUATORS**	Pneumatic Rack & Pinion actuators	-	**38**
	**RK-NEEDLE VALVES**	High-pressure needle valves	DN 4 - 10	**40**
	SAMPLE OF APPLICATIONS	-	-	**43**

INTEC K100

Perfect solution for laboratory, chemical analysis, testing and mini plant!

The high pressure series for all laboratory and miniplant applications for process industries. The series is available from threaded end to clamping ring connection. All variations are used for laboratory and also in control applications.

A benefit for this series is also the smart possibility for automation. Certified acc. to German clean air act VDI 2440!



Type:	Small ball valve
Nominal sizes:	DN 8 - 20
Pressure range:	PN 100, PN 160 and PN 250
Temperature:	up to +260°C
Material of body:	Stainless steel
End connections:	With female threaded ends, with male threaded ends, one side with female threaded end and other side with male threaded end, with pipe screwing light / heavy series with clamping ring connection
Face to face dimensions:	See relevant ball valve types
Accessories:	Heating jacket, hand lever with bayonet locking, hand lever extension, block unit – padlock unit, spring close unit – automatical return lever (“deadman handle”)

CERTIFICATES AND APPROVALS:

- Certified acc. to VDI 2440
- ATEX 2014/34/EU

SPECIAL DESIGNS:

- Special materials like Duplex, Super Duplex, Hastelloy B2/C4/C276, Titanium, Zirconium, Monell, Nickel etc.
- PEEK seated
- Special connections on request

PRODUCT ADVANTAGES:

- Compact design
- One piece body reduces fugitive emissions
- Best suited for automation
- Wide range of accessories

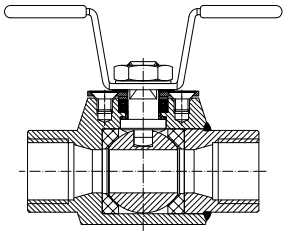

INTEC K110

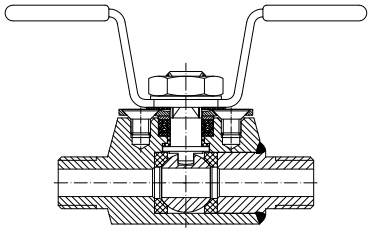

INTEC K120

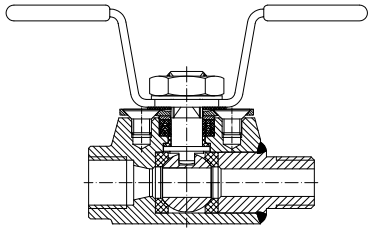

INTEC K130

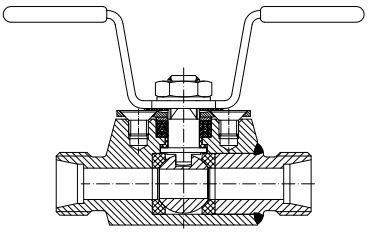

INTEC K140

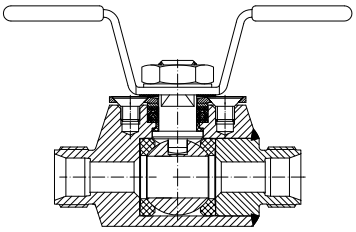

INTEC K150

Series INTEC K100	DN	PN	Temperature
Type INTEC K110 female threaded ends acc. to EN ISO 228-1, G ¼“ up to G 1", face to face dimensions acc. to DIN 3202 part 4-M3	8 - 20	100, 160	up to +225°C
Type INTEC K120 male threaded ends acc. to EN ISO 228-1, G ¼“ up to G 1", face to face dimensions acc. to producers standard	8 - 20	100, 160	up to +225°C
Type INTEC K130 male and female threaded ends acc. to EN ISO 228-1, G ¼“ up to G 1", face to face dimensions acc. to producers standard	8 - 20	100, 160	up to +225°C
Type INTEC K140 pipe screwing light/heavy series acc. to DIN 2353, 6-L up to 18-L, 6-S up to 12-S, face to face dimensions acc. to producers standard	8 - 15	100, 160, 250	up to +225°C
Type INTEC K150 clamping ring connection, pipe Ø 6 up to Ø 18, face to face dimensions acc. to producers standard	8 - 15	100, 160, 250	up to +260°C

Material	Material of body
Stainless steel	1.4571/1.4404

INTEC BALL VALVES

System technology in one hand.

For your functionality and plant safety:

» Reinforced stem design for more safety in automation
» Dynamic primary sealing by floating ring principle
» German clean air act approval acc. to VDI 2440

For reduction of your variations:

» Fire-safe/Clean air act design - all in one - the best standard
» FDA conformity for pharmaceutical application
» System construction unit of all components for reduction of storage costs

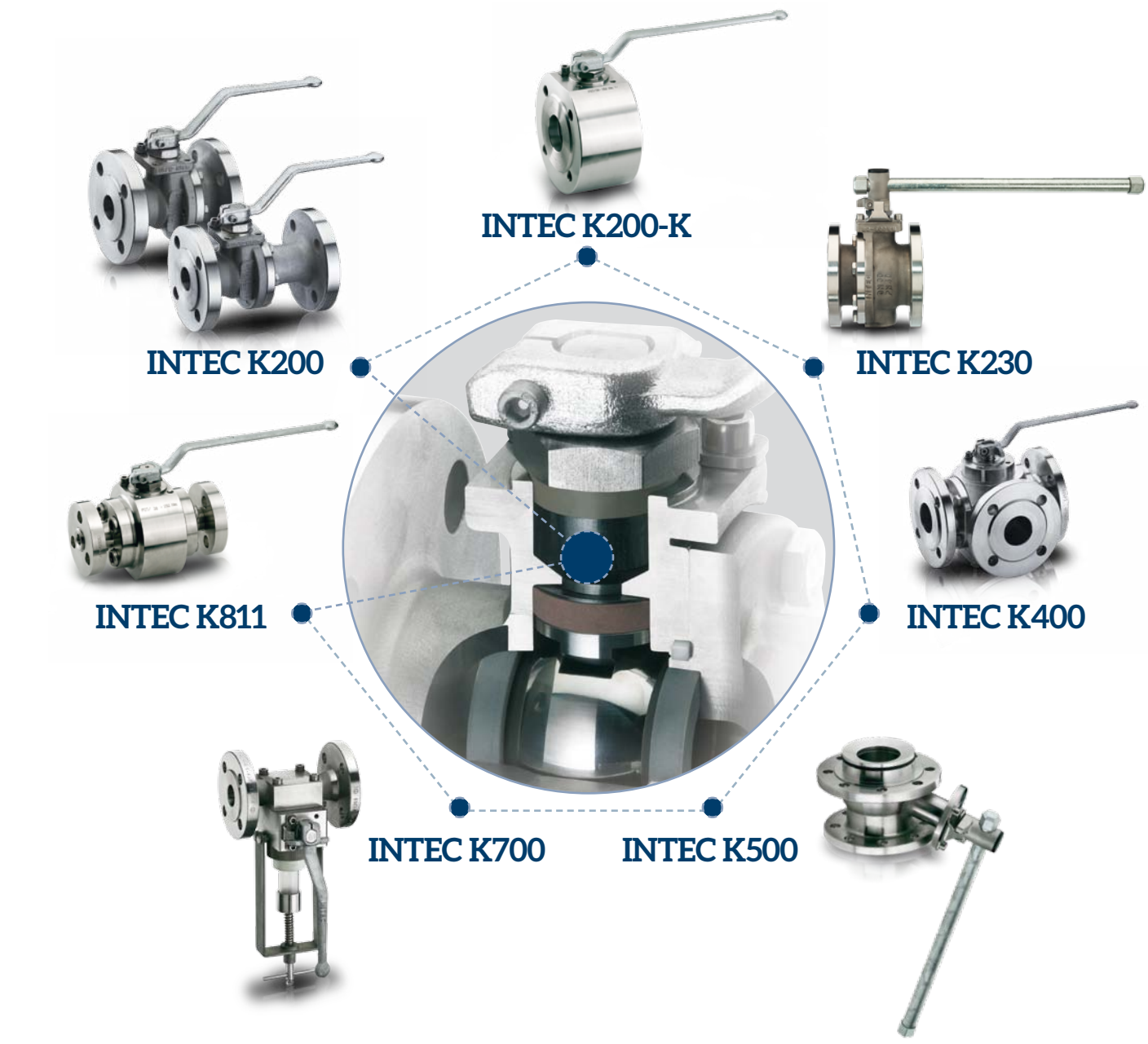

INTEC K200

High end ball valves for the chemical industry. One concept for all!

Proven design with perfect technical functionality. The ball valves are available in various material combinations and with different features.

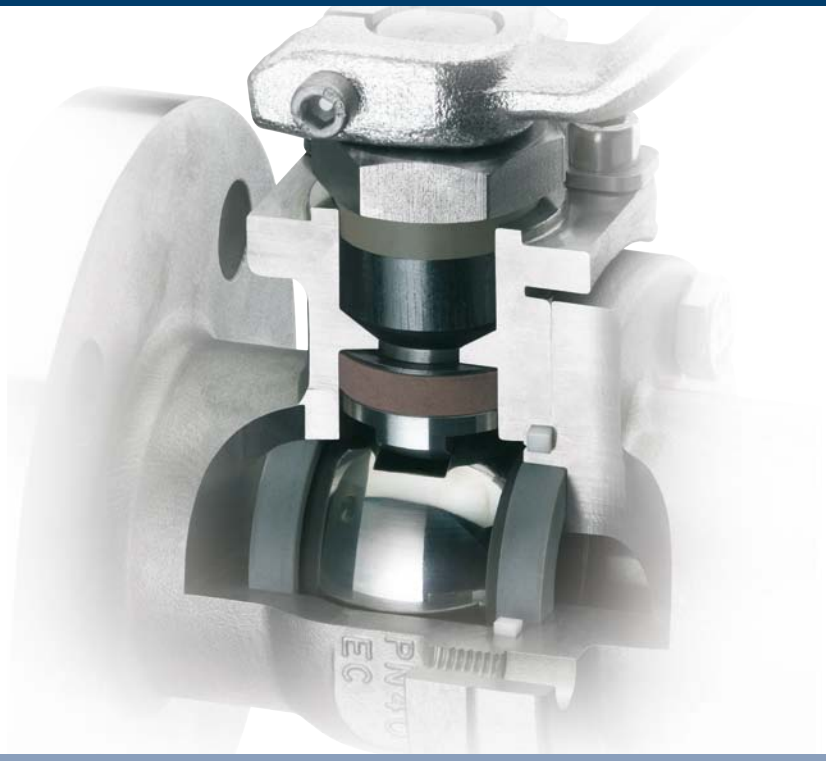

Type:	2-piece flanged ball valve
Nominal sizes:	DN 15 - 500 NPS ½“ - 20“
Pressure range:	PN 16 and PN 40 ANSI Class 150 and Class 300
Temperature:	up to +400°C
Material of body:	Stainless steel, carbon steel
End connections:	Flanges acc. to EN 1092 Flanges acc. to ANSI B 16.5
Face to face dimensions:	acc. to EN 558, GR.1 and GR.27 acc. to ANSI B 16.10
Accessories:	Heating jacket, hand lever extension, stem extension, block unit – padlock unit, grid unit, hand lever with bayonet locking, spring close unit – automatical return handle (“dead man handle”), gear (hand operated)

CERTIFICATES AND APPROVALS:

- Certified acc. to German clean air act VDI 2440, 100,000 cycles -40°C up to +220°C
- Fire-Safe acc. to API 607 and DIN EN ISO 10497
- Classification acc. to SIL 2
- ATEX 2014/34/EU
- Type-test approval mark No. TÜV.A.318-15
- Type-test approval mark No. TÜ.AGG.431-09 for tanks for conveyance of dangerous goods (optional)
- Type Test Certificate TTC (optional)
- Certified acc. to API 6D (optional)

SPECIAL DESIGNS:

- Wide range of special materials

PRODUCT ADVANTAGES:

- Approvals acc. to virtually regulations
- System construction unit of all components for reduction of storage costs
- No o-rings – universal applicable
- Stuffing box system absolutely ageing resistant
- System design in a Graphite/KF cone ring principle
- Real primary sealing, no friction washer or bearing ring using of the floating ring seal principle (Graphite cone ring in KFGN-profile)
- Stem material Duplex (1.4462), using of best knowledge of the pump technology
- Reinforced stem design for more safety in automation
- FDA conformity for pharmaceutical application (optional)
- BAM conformity for oxygen (optional)

INTEC
K200, K210, K214, K220, K224

Seat ring system soft seated or PEEK seated.

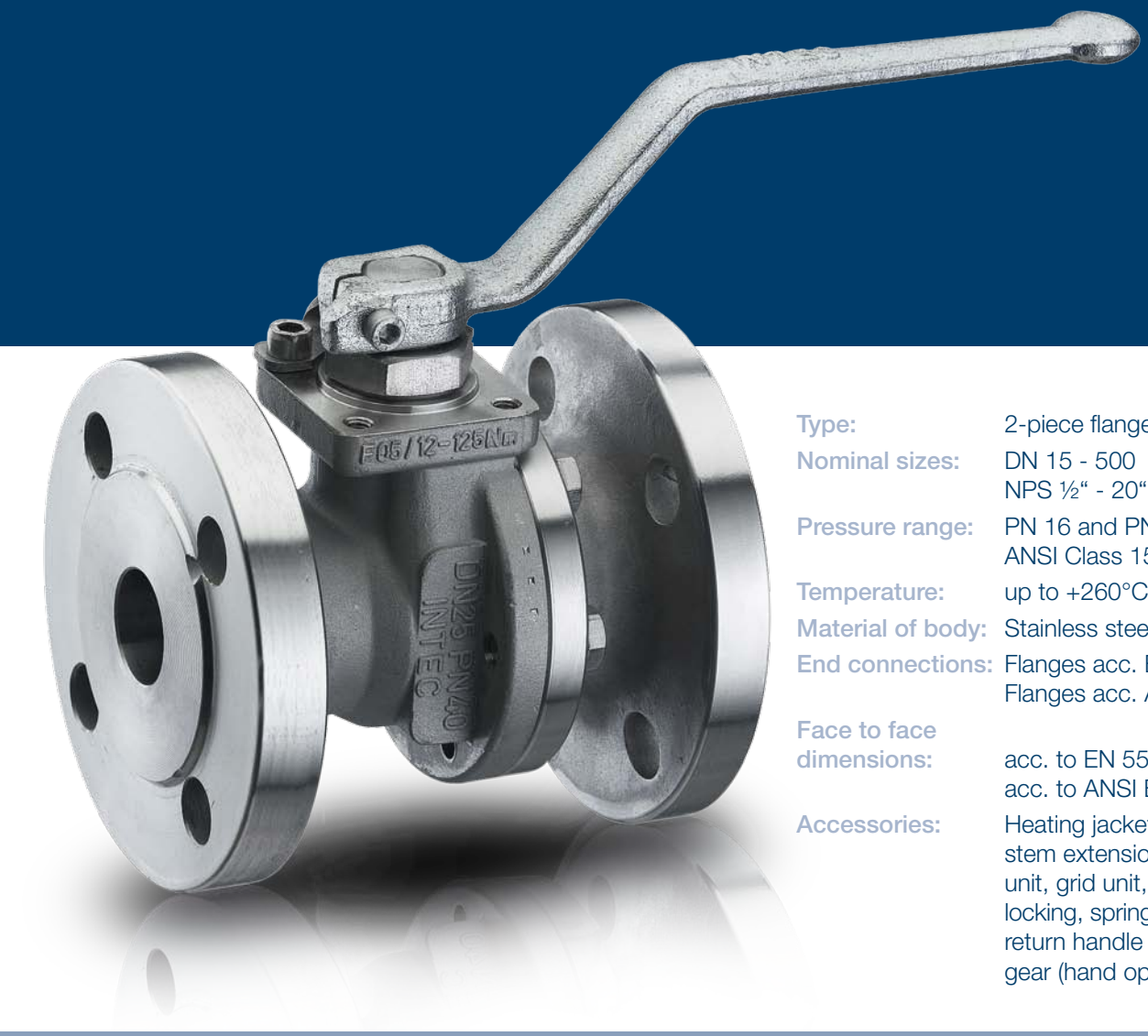

Type:	2-piece flanged ball valve
Nominal sizes:	DN 15 - 500 NPS ½“ - 20“
Pressure range:	PN 16 and PN 40 ANSI Class 150 and Class 300
Temperature:	up to +260°C
Material of body:	Stainless steel, carbon steel
End connections:	Flanges acc. EN 1092 Flanges acc. ANSI B 16.5
Face to face dimensions:	acc. to EN 558, GR.1 and GR.27 acc. to ANSI B 16.10
Accessories:	Heating jacket, hand lever extension, stem extension, block unit – padlock unit, grid unit, hand lever with bayonet locking, spring close unit – automatical return handle (“dead man handle”), gear (hand operated)

CERTIFICATES AND APPROVALS:

- Certified acc. to German clean air act VDI 2440, 100,000 cycles -40°C up to +220°C
- Fire-Safe acc. to API 607 and DIN EN ISO 10497
- Classification acc. to SIL 2
- ATEX 2014/34/EU
- Type-test approval mark No. TÜV.A.318-15
- Type-test approval mark No. TÜ.AGG.431-09 for tanks for conveyance of dangerous goods (optional)
- Type Test Certificate TTC (optional)
- Certified acc. to API 6D (optional)

SPECIAL DESIGNS:

- Special materials like Duplex, Super Duplex, Hastelloy B2/C4/C276, Titanium, Zirconium, Monell, Nickel etc.

PRODUCT ADVANTAGES:

- Three side chambering of the seat ring
- Reduction of abrasion, microdiffusion and operating torque
- Best experiences in the chemical industry are made
- Wide range of sealing materials:
  - KFM
  - KFGN (nitrogenium sintered)
  - KFCM (for steam application)
  - PEEK (continuous operation up to +260°C)

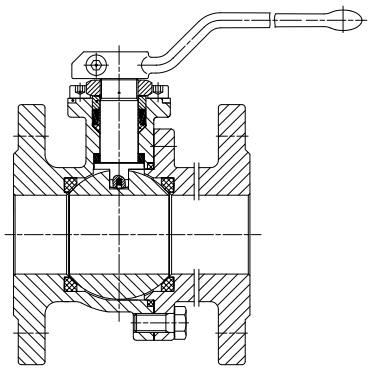

INTEC K200, DN 15 - 100

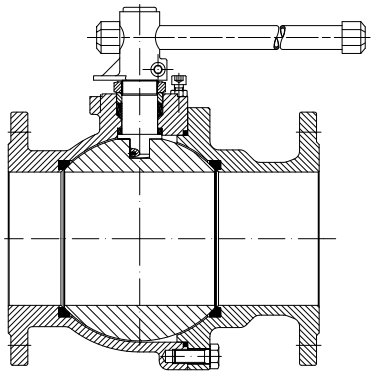

INTEC K200, DN 125 - 200

Seat ring system - soft seated / PEEK seated	DIN		ANSI		Temperature
	DN	PN	NPS	PN	
Type INTEC K200 floating ball, soft seated, top flange DIN EN ISO 5211, full bore	15 - 200	16, 40	½“ - 8“	Cl. 150, 300	up to +225°C
Type INTEC K210 trunnion mounted ball, soft seated, both sides spring loaded seat rings, top flange DIN EN ISO 5211, full bore	80 - 500	16, 40	3“ - 20“	Cl. 150, 300	up to +225°C
Type INTEC K214 trunnion mounted ball, PEEK seated, both sides spring loaded seat rings, top flange DIN EN ISO 5211, full bore	80 - 500	16, 40	3“ - 20“	Cl. 150, 300	up to +260°C
Type INTEC K220 floating ball, soft seated, single side spring loaded seat ring, top flange DIN EN ISO 5211, full bore	15 - 200	16, 40	½“ - 8“	Cl. 150, 300	up to +225°C
Type INTEC K224 floating ball, PEEK seated, single side spring loaded seat ring, top flange DIN EN ISO 5211, full bore	15 - 200	16, 40	½“ - 8“	Cl. 150, 300	up to +260°C

End connections / Face to face dimensions	DIN (EN)	ANSI
Flanges acc. to	EN 1092	ANSI B 16.5
Face to face dimensions acc. to	EN 558, GR.1 / GR.27	ANSI B 16.10

Material	Material of body	
	DIN (EN)	ANSI
Stainless steel	1.4408	ASTM A351-CF8M
Carbon steel	1.0619	ASTM A216 WCB

INTEC K211, K221

Seat ring system metal seated.



Type:	2-piece flanged ball valve
Nominal sizes:	DN 15 - 300 NPS ½“ - 12“
Pressure range:	PN 16 and PN 40 ANSI Class 150 and Class 300
Temperature:	up to +400°C
Material of body:	Stainless steel, carbon steel
End connections:	Flanges acc. to EN 1092 Flanges acc. to ANSI B 16.5
Face to face dimensions:	acc. to EN 558, GR.1 and GR.27 acc. to ANSI B 16.10
Accessories:	Heating jacket, hand lever extension, stem extension, block unit – padlock unit, grid unit, hand lever with bayonet locking, spring close unit – automatical return handle (“dead man handle”), gear (hand operated)

CERTIFICATES AND APPROVALS:

- Certified acc. to German clean air act VDI 2440, 100,000 cycles -40°C up to +220°C
- Fire-Safe acc. to API 607 and DIN EN ISO 10497
- Classification acc. to SIL 2
- ATEX 2014/34/EU
- Type-test approval mark No. TÜV.A.318-15
- Type Test Certificate TTC (optional)
- Certified acc. to API 6D (optional)

SPECIAL DESIGNS:

- Special materials like Duplex, Super Duplex, Hastelloy B2/C4/C276, Titanium, Zirconium, Monell, Nickel etc.

PRODUCT ADVANTAGES:

- Seat ring and ball hart metal coated
- Sleeken seat and ball polished
- High precision beared ball
- Spring loaded, spiral springs chambered
- No use of disc springs to forcing the seat ring
- No dangerous because of crevice corrosion
- Gas-tight
- High working life
- Different coatings available

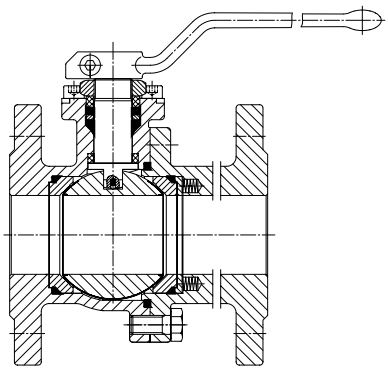

INTEC K221, DN 15 - 100

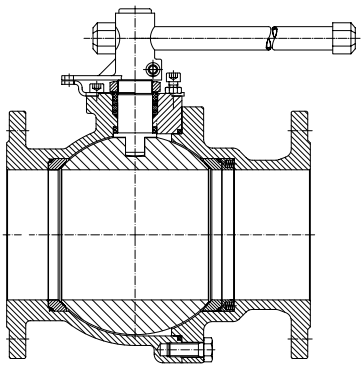

INTEC K221, DN 80 - 250

Seat ring system - metal seated	DIN		ANSI		Temperature
	DN	PN	NPS	PN	
Type INTEC K211 trunnion mounted ball, metal seated, both sides spring loaded seat rings, top flange DIN EN ISO 5211, full bore	80 - 300	16, 40	3“ - 12“	Cl. 150, 300	up to +400°C
Type INTEC K221 floating ball, metal seated, single side spring loaded seat ring, top flange DIN EN ISO 5211, full bore	15 - 200	16, 40	½“ - 8“	Cl. 150, 300	up to +400°C

End connections / Face to face dimensions	DIN (EN)	ANSI
Flanges acc. to	EN 1092	ANSI B 16.5
Face to face dimensions acc. to	EN 558, GR.1 / GR.27	ANSI B 16.10

Material	Material of body	
	DIN (EN)	ANSI
Stainless steel	1.4408	ASTM A351-CF8M
Carbon steel	1.0619	ASTM A216 WCB

INTEC K230, K231, K234

Free outlet, clearance volume free.
Critical medias safe handling!

The ball valve revolution for all condition of aggregation. Fields of application: production of catalysers, transport of solids (bulk material transport systems), gaseous medias with contend of solid, solid/liquid applications, crystallising medias.



Type:	2-piece flanged ball valve
Nominal sizes:	DN 50 - 500 NPS 2“ - 20“
Pressure range:	PN 16 and PN 40 ANSI Class 150 and Class 300
Temperature:	up to +400°C
Material of body:	Stainless steel, carbon steel
End connections:	Flanges acc. to EN 1092 Flanges acc. to ANSI B 16.5
Face to face dimensions:	acc. to EN 558, GR.1 and GR.27 acc. to ANSI B 16.10
Accessories:	Heating jacket, hand lever extension, stem extension, block unit – padlock unit, grid unit, hand lever with bayonet locking, spring close unit – automatical return handle (“dead man handle”), gear (hand operated)

CERTIFICATES AND APPROVALS:

- Certified acc. to German clean air act VDI 2440, 100,000 cycles -40°C up to +220°C
- Fire-Safe acc. to API 607 and DIN EN ISO 10497
- Classification acc. to SIL 2
- ATEX 2014/34/EU
- Type-test approval mark No. TÜV.A.318-15
- Type Test Certificate TTC (optional)
- Certified acc. to API 6D (optional)

SPECIAL DESIGNS:

- Special materials like Duplex, Super Duplex, Hastelloy B2/C4/C276, Titanium, Zirconium, Monell, Nickel etc.

PRODUCT ADVANTAGES:

- Equipped with all advantages of series INTEC K200
- Also metal to metal gas tight acc. to EN 12266-1, leak rate A
- Free outlet for all kinds of solid
- Clearance volume free
- Wide range of special materials

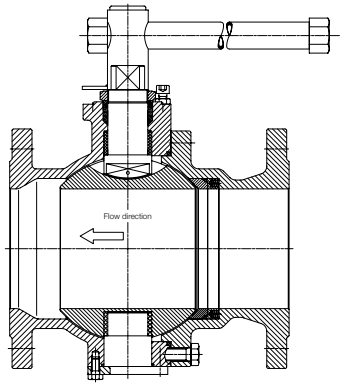

INTEC K231

Series INTEC K230	DIN		ANSI		Temperature
	DN	PN	NPS	PN	
Type INTEC K230 trunnion mounted ball, soft seated, single side spring loaded seat ring, free outlet, top flange DIN EN ISO 5211, full bore	50 - 500	16, 40	2“ - 20“	Cl. 150, 300	up to +225°C
Type INTEC K231 trunnion mounted ball, metal seated, single side spring loaded seat ring, free outlet, top flange DIN EN ISO 5211, full bore	50 - 300	16, 40	2“ - 12“	Cl. 150, 300	up to +400°C
Type INTEC K234 trunnion mounted ball, PEEK seated, single side spring loaded seat ring, free outlet, top flange DIN EN ISO 5211, full bore	50 - 500	16, 40	2“ - 20“	Cl. 150, 300	up to +260°C

End connections / Face to face dimensions	DIN (EN)	ANSI
Flanges acc. to	EN 1092	ANSI B 16.5
Face to face dimensions acc. to	EN 558, GR.1 / GR.27	ANSI B 16.10

Material	Material of body	
	DIN (EN)	ANSI
Stainless steel	1.4408	ASTM A351-CF8M
Carbon steel	1.0619	ASTM A216 WCB

INTEC K200-K

Wafer type ball valve of the modular INTEC system technology!

Equipped with all advantages of the INTEC K200 as well as face to face dimensions acc. to EN 558, Gr.107, this wafer type ball valve is the favourite for special materials in all chemical plants.



Type:	Wafer type ball valve
Nominal sizes:	DN 15 - 80
Pressure range:	PN 16 and PN 40
Temperature:	up to +400°C
Material of body:	Stainless steel, carbon steel
End connections:	Flanges acc. to EN 1092
Optional:	Bearing version
Face to face dimensions:	acc. to EN 558, GR.107
Accessories:	Heating jacket, hand lever extension, stem extension, block unit – padlock unit, grid unit, hand lever with bayonet locking, spring close unit – automatical return handle (“dead man handle”), gear (hand operated)

CERTIFICATES AND APPROVALS:

- Certified acc. to German clean air act VDI 2440, 100,000 cycles -40°C up to +220°C
- Fire-Safe acc. to DIN EN ISO 10497
- ATEX 2014/34/EU

SPECIAL DESIGNS:

- Special materials like Duplex, Super Duplex, Hastelloy B2/C4/C276, Titanium, Zirconium, Monell, Nickel etc.

PRODUCT ADVANTAGES:

- Equipped with all advantages of the series INTEC K200
- Face to face dimensions acc. to EN 558, GR.107
- Wide range of special materials
- Top flange DIN EN ISO 5211

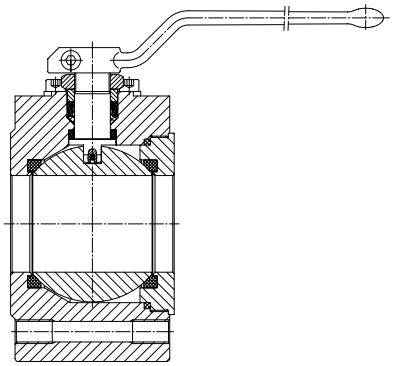

Face to face acc. to EN 558, GR.107

Series INTEC K200-K	DN	PN	Temperature
Type INTEC K200-K floating ball, soft seated, top flange DIN EN ISO 5211, full bore	15 - 80	16, 40	up to +225°C
Type INTEC K221-K floating ball, metal seated, single side spring loaded seat ring, top flange DIN EN ISO 5211, full bore	15 - 80	16, 40	up to +400°C
Type INTEC K224-K floating ball, PEEK seated, single side spring loaded seat ring, top flange DIN EN ISO 5211, full bore	15 - 80	16, 40	up to +260°C
Type INTEC K231-K trunnion mounted ball, metal seated, single side spring loaded seat ring, free outlet, top flange DIN EN ISO 5211, full bore	15 - 80	16, 40	up to +400°C

Material	Material of body
Stainless steel	1.4571/1.4404
Carbon steel	1.0460

INTEC K204-S-D

Steam ball valve, which protects your resources!

The maintenance-free steam ball valve for the safe relaxation of steam-prominent elastomere hoses.



Type:	Steam ball valve
Nominal sizes:	DN 25/20
Pressure range:	PN 25
Temperature:	up to +210°C
Material of body:	Stainless steel
End connections:	Inlet with flange connection acc. to EN 1092, outlet with threaded end G ¾“ acc. to EN ISO 228-1, outlet pressure relief connection threaded end G ¼“ acc. to EN ISO 228-1
Face to face dimensions:	acc. to producers standard
Accessories:	Hand lever extention

CERTIFICATES AND APPROVALS:

» Qualified for steam application (internal tests)

PRODUCT ADVANTAGES:

» Safe pressure relief of steam hoses
» Saving of time acc. to self pressure relief
» Increase the service life of steam hoses

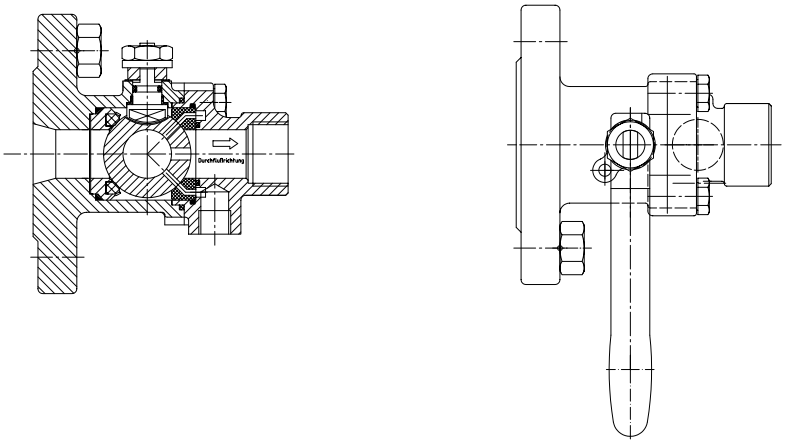

Series INTEC K204-S-D	DN	PN	Temperature
Type INTEC K204-S-D soft seated, reduced bore	25/20	25	up to +210°C

Material	Material of body
Stainless steel	1.4408

INTEC K400

Multiple way ball valve of the modular INTEC system technology!

The universal multiple way ball valve in the unit construction system of the INTEC K200 series.

With 3-, 4- or 5-way applications, your medium is safety in flow!



Type:	Multiple way ball valve
Nominal sizes:	DN 15 - 150 NPS ½“ - 6“
Pressure range:	PN 16 bis PN 160 ANSI Class 150, 300, 600, 900
Temperature:	up to +400°C
Material of body:	Stainless steel, carbon steel
End connections:	Flanges acc. to EN 1092 Flanges acc. to ANSI B 16.5
Face to face dimensions:	acc. to EN 558, GR.1 acc. to ANSI B 16.10
Accessories:	Heating jacket, hand lever extension, stem extension, block unit – padlock unit, grid unit, hand lever with bayonet locking, spring close unit – automatical return handle (“dead man handle”), gear (hand operated)

CERTIFICATES AND APPROVALS:

- Certified acc. to German clean air act VDI 2440, 100,000 cycles -40°C up to +220°C
- ATEX 2014/34/EU

SPECIAL DESIGNS:

- Special materials like Duplex, Super Duplex, Hastelloy B2/C4/C276, Titanium, Zirconium, Monell, Nickel etc.
- Higher pressure ratings and temperatures on request
- Other face to face dimensions on request

PRODUCT ADVANTAGES:

- Equipped with all advantages of series INTEC K200
- Full bore
- T- or L-bore
- Overlap free ports available (optional)
- Top flange DIN EN ISO 5211

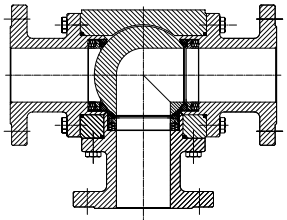

L-bore

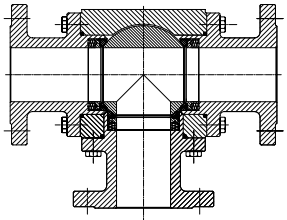

T-bore

Port / Type	1	2	3	4
L	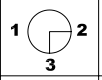	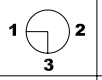	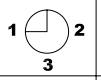	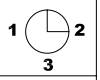
T	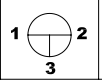	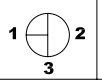	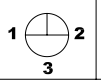	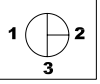

Series INTEC K400	DIN		ANSI		Temperature
	DN	PN	NPS	PN	
Type INTEC K410 trunnion mounted ball, soft seated, spring loaded seat rings, top flange DIN EN ISO 5211, full bore	15 - 150	16, 40	½“ - 6“	Cl. 150, 300	up to +225°C
Type INTEC K411 trunnion mounted ball, metal seated, spring loaded seat rings, top flange DIN EN ISO 5211, full bore	15 - 150	16, 40	½“ - 6“	Cl. 150, 300	up to +400°C
Type INTEC K414 trunnion mounted ball, PEEK seated, spring loaded seat rings, top flange DIN EN ISO 5211, full bore	15 - 150	16, 40	½“ - 6“	Cl. 150, 300	up to +260°C

End connections / Face to face dimensions	DIN (EN)	ANSI
Flanges acc. to	EN 1092	ANSI B 16.5
Face to face dimensions acc. to	EN 558, GR.1	ANSI B 16.10

Material	Material of body	
	DIN (EN)	ANSI
Stainless steel	1.4408/1.4571/1.4404	ASTM A351-CF8M
Carbon steel	1.0619/1.0460	ASTM A216 WCB

INTEC K500

Tank bottom ball valve of the modular INTEC system technology!

The stem is angularly placed and thus a marsh free installation and trouble free automation is possible.



Type:	Tank bottom ball valve
Nominal sizes:	DN 80/50 - 200/150
Pressure range:	PN 10 and PN 16
Temperature:	up to +400°C
Material of body:	Stainless steel
End connections:	Flanges acc. to EN 1092 Tank connections: acc. to DIN 28140 (drain valve) acc. to DIN 28117 (loose flange)
Face to face dimensions:	acc. to EN 558, GR.13
Accessories:	Heating jacket, flushing connection

CERTIFICATES AND APPROVALS:

- Certified acc. to German clean air act VDI 2440, 100,000 cycles -40°C up to +220°C
- ATEX 2014/34/EU

SPECIAL DESIGNS:

- Special materials like Duplex, Super Duplex, Hastelloy B2/C4/C276, Titanium, Zirconium, Monell, Nickel etc.

PRODUCT ADVANTAGES:

- Equipped with all advantages of series INTEC K200
- Individual connections on request
- Clearance volume minimized
- Marsh free installation
- Trouble free automation
- Metal seated up to +400°C

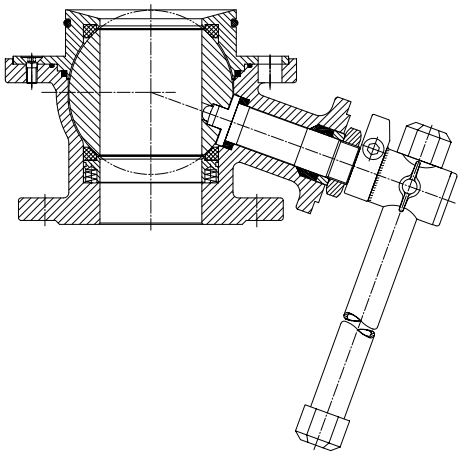

Series INTEC K500	DN	PN	Temperature
Type INTEC K500 floating ball, soft seated, single side spring loaded seat ring, tank connection acc. to DIN 28140 part 1	80/50 - 200/150	10, 16	up to +225°C
Type INTEC K521 floating ball, metal seated, single side spring loaded seat ring, tank connection acc. to DIN 28140 part 1	80/50 - 200/150	10, 16	up to +400°C
Type INTEC K524 floating ball, PEEK seated, single side spring loaded seat ring, tank connection acc. to DIN 28140 part 1	80/50 - 200/150	10, 16	up to +260°C
Type INTEC K531 trunnion mounted ball, metal seated, single side spring loaded seat ring, free outlet, straight stem, tank connection acc. to DIN 28140 part 1	80/50 - 200/150	10, 16	up to +400°C

Material	Material of body
Stainless steel	1.4408/1.4571/1.4404

INTEC K600

No compromise for your kettle pressure!

Stainless steel ball valves for pressure gauges and measurement lines.

The different variations of your connection like flanges acc. to EN 1092, outside thread acc. to DIN 16288, pressure gauge connection acc. to DIN 16284 or female and male thread variations are available. The minimised dimensions and the safety regarding the pressure relief of the gauge are the absolutely advantages for this product. Available with vent bore, without vent bore, with test connection port or with expansion tube. Certified acc. to German clean air act VDI 2440!

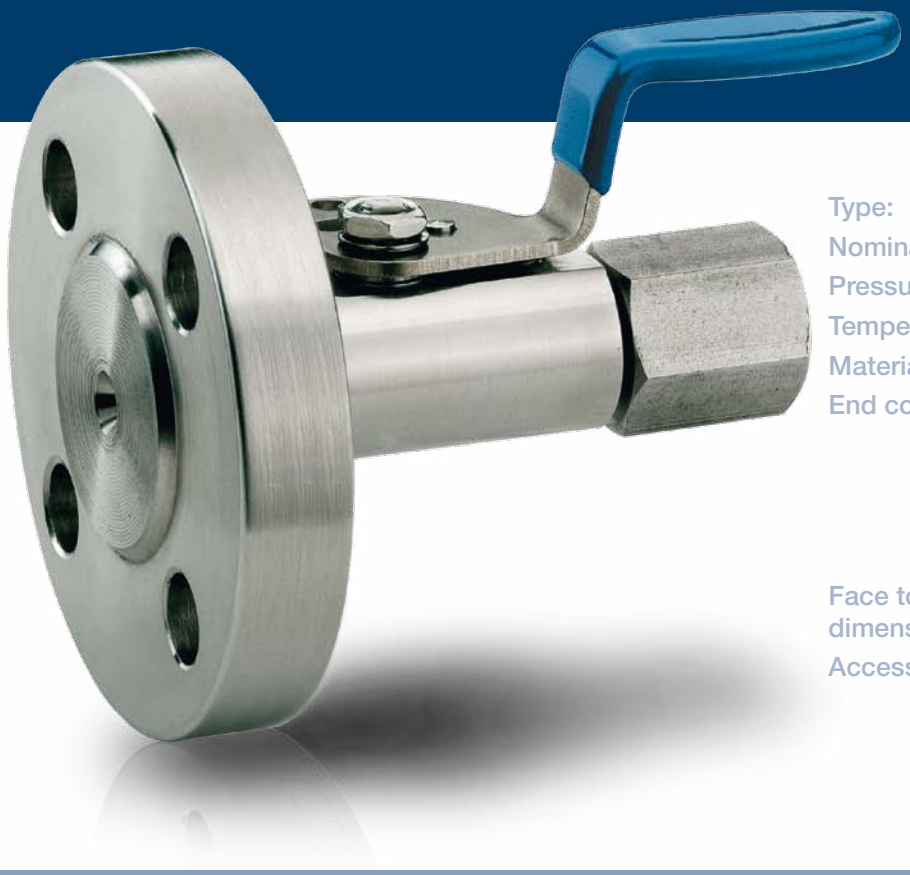

Type:	Pressure gauge ball valve
Nominal sizes:	DN 4 - 100
Pressure range:	PN 16, PN 40 and PN 160
Temperature:	up to +225°C
Material of body:	Stainless steel
End connections:	Flanges acc. to EN 1092
	Outside thread acc. to DIN 16288
	Pressure gauge connection acc. to DIN 16284
	Female and male thread
Face to face dimensions:	acc. to producers standard
Accessories:	Hand lever extension, block unit – padlock unit

CERTIFICATES AND APPROVALS:

- Certified acc. to German clean air act VDI 2440
- ATEX 2014/34/EU

SPECIAL DESIGNS:

- Special materials like Duplex, Super Duplex, Hastelloy B2/C4/C276, Titanium, Zirconium, Monell, Nickel etc.

PRODUCT ADVANTAGES:

- Different variations of connections
- Minimized dimensions
- Safety regarding the pressure relief of the gauge
- Available with vent bore, without vent bore, with test connection port or with expansion tube

Options:

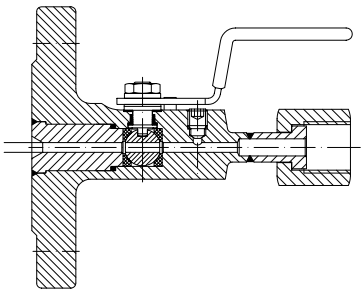

INTEC K6xx/2
without vent bore

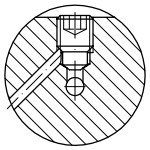

INTEC K6xx/3
with vent bore

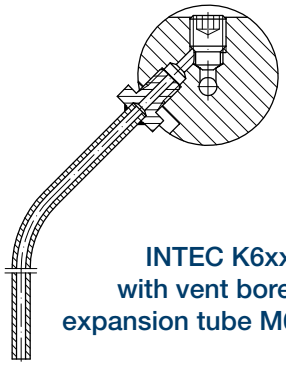

INTEC K6xx/4
with vent bore and
expansion tube M6 / G 1/8"

Series INTEC K600	DN	PN	Temperature
Type INTEC K610 connection acc. to DIN 16288 / collar cap with cap nut G ½“ acc. to DIN 16284	½“	100	up to +225°C
Type INTEC K620 flanges acc. to EN 1092 / collar cap with cap nut G ½“ acc. to DIN 16284	15 - 100	16, 40	up to +225°C
Type INTEC K640 flanges acc. to EN 1092 / pipe screwing light/heavy series acc. to DIN 2353 10-S and 12-S	15 - 100	16, 40	up to +225°C

Material	Material of body
Stainless steel	1.4408/1.4571/1.4404

INTEC K700

Sampling device ball valve of the modular INTEC system technology!



This assembling device ball valve owned an extremely big outlet with pressure relief of the sampling flask.

The sealing systems and also the body materials can be designed acc. to medium requirements.

This sampling device unit is available for plant lines from DN 15 up to DN 200. Cavity filler design is available. Flask connection with thread acc. to DIN 168 or spring loaded disk is possible.

Type:	Sampling device ball valve
Nominal sizes:	DN 15 - 200
Pressure range:	PN 16 and PN 40
Temperature:	up to +400°C
Material of body:	Stainless steel
End connections:	Flanges acc. to EN 1092
Face to face dimensions:	acc. to EN 558, GR.1 and GR.27
Accessories:	Heating jacket, hand lever extension, stem extension, block unit – padlock unit, grid unit, hand lever with bayonet locking, bottle support with spring loaded disc, metal bottle with bayonet locking, protection cover with bayonet locking, protection box made of stainless steel for vacuum or pressure relief, hollow needle system for septum-bottle

CERTIFICATES AND APPROVALS:

- Certified acc. to German clean air act VDI 2440, 100,000 cycles -40°C up to +220°C
- ATEX 2014/34/EU

SPECIAL DESIGNS:

- Special materials like Duplex, Super Duplex, Hastelloy B2/C4/C276, Titanium, Zirconium, Monell, Nickel etc.

PRODUCT ADVANTAGES:

- Equipped with all advantages of series INTEC K200
- Extremely big outlet
- Sealing systems and body materials can be designed acc. to medium requirements
- Cavity filler design is available
- Bottle connection with thread acc. to DIN 168 or with spring loaded disk
- Various threaded connections on request

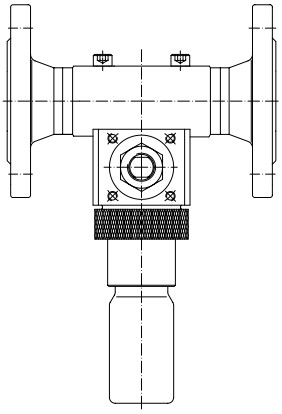

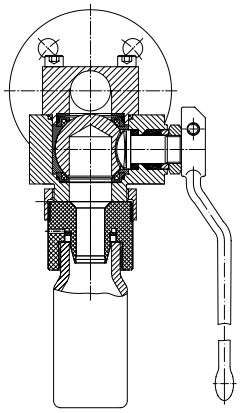

Series INTEC K700	DN	PN	Temperature
Type INTEC K730 ball bore 30mm, sample volume per switch 10, 15, 25 ml, soft seated	15 - 200	16, 40	up to +225°C
Type INTEC K731 ball bore 30mm, sample volume per switch 10, 15, 25 ml, metal seated	15 - 200	16, 40	up to +400°C
Type INTEC K740 ball bore 40mm, sample volume per switch 40, 50, 70 ml, soft seated	15 - 200	16, 40	up to +225°C
Type INTEC K741 ball bore 40mm, sample volume per switch 40, 50, 70 ml, metal seated	15 - 200	16, 40	up to +400°C

Material	Material of body
Stainless steel	1.4408/1.4571/1.4404

INTEC K811

3-piece high-pressure ball valve of the modular INTEC system technology!

High precision bearings and both sides spring loaded seat ring elements are responsible for a safety handling in all applications of the high pressure ranges.



Type:	3-piece high-pressure ball valve
Nominal sizes:	DN 16, DN 24, DN 30, DN 45
Pressure range:	PN 325
Temperature:	up to +400°C
Material of body:	Stainless steel, carbon steel
End connections:	Flanges acc. to BASF-WN 18011
Face to face dimensions:	acc. to EN 558, GR.2
Accessories:	Heating jacket, hand lever extension, stem extension, block unit – padlock unit, grid unit, hand lever with bayonet locking, gear (hand operated)

CERTIFICATES AND APPROVALS:

- Certified acc. to German clean air act VDI 2440
- ATEX 2014/34/EU

SPECIAL DESIGNS:

- Special materials like Duplex, Super Duplex, Hastelloy B2/C4/C276, Titanium, Zirconium, Monell, Nickel etc.

PRODUCT ADVANTAGES:

- Equipped with all advantages of series INTEC K200
- Two-piece split body or three-piece split body design
- Extreme long-life acc. high precision bearing of the stem
- Optimized arrangement of the bearing forces
- Leakage rate A

INTEC K811	DN	PN	Temperature
Type INTEC K811 trunnion mounted ball, metal seated, both sides spring loaded seat rings, top flange DIN EN ISO 5211, full bore	16, 24, 30, 45	325	up to +400°C

Material	Material of body
Stainless steel	1.4571/1.4404
Carbon steel	1.0460

INTEC HIGH-PRESSURE BALL VALVES

High-pressure ball valves of the modular INTEC system technology!

INTEC High-pressure ball valves	DIN		ANSI		Temperature
	DN	PN	NPS	PN	
Type INTEC K211 trunnion mounted ball, metal seated, both sides spring loaded seat rings, top flange DIN EN ISO 5211, full bore	40 - 300	63, 100, 160, 250	1½“ - 12“	Cl. 600, 900, 1500	up to +400°C
Type INTEC K214 trunnion mounted ball, PEEK seated, both sides spring loaded seat rings, top flange DIN EN ISO 5211, full bore	40 - 500	63, 100, 160, 250	1½“ - 20“	Cl. 600, 900, 1500	up to +260°C
Type INTEC K231 trunnion mounted ball, metal seated, single side spring loaded seat ring, free outlet, top flange DIN EN ISO 5211, full bore	15 - 300	63, 100, 160, 250	½“ - 12“	Cl. 600, 900, 1500	up to +400°C
Type INTEC K234 trunnion mounted ball, PEEK seated, single side spring loaded seat ring, free outlet, top flange DIN EN ISO 5211, full bore	15 - 500	63, 100, 160, 250	½“ - 20“	Cl. 600, 900, 1500	up to +260°C
Type INTEC K811 trunnion mounted ball, metal seated, both sides spring loaded seat rings, top flange DIN EN ISO 5211, full bore	15 - 25	63, 100, 160, 250	½“ - 1“	Cl. 600, 900, 1500	up to +400°C
Type INTEC K814 trunnion mounted ball, PEEK seated, both sides spring loaded seat rings, top flange DIN EN ISO 5211, full bore	15 - 25	63, 100, 160, 250	½“ - 1“	Cl. 600, 900, 1500	up to +225°C

End connections / Face to face dimensions	DIN (EN)	ANSI
Flanges acc. to	EN 1092	ANSI B 16.5
Face to face dimensions acc. to	EN 558, GR.1 / GR. 2 / GR.27	ANSI B 16.10

Materials: Special materials like Duplex, Super Duplex, Hastelloy B2/C4/C276, Titanium, Zirconium, Monell, Nickel etc.

SAMPLING DEVICE BALL VALVE TYPE 300 P

One-piece sampling device ball valve.

The economical solution for open sampling in the field of laboratory- and process engineering. Optional variations of connections, e.g. female thread, clamping ring connection, cutting ring connection etc. are available.

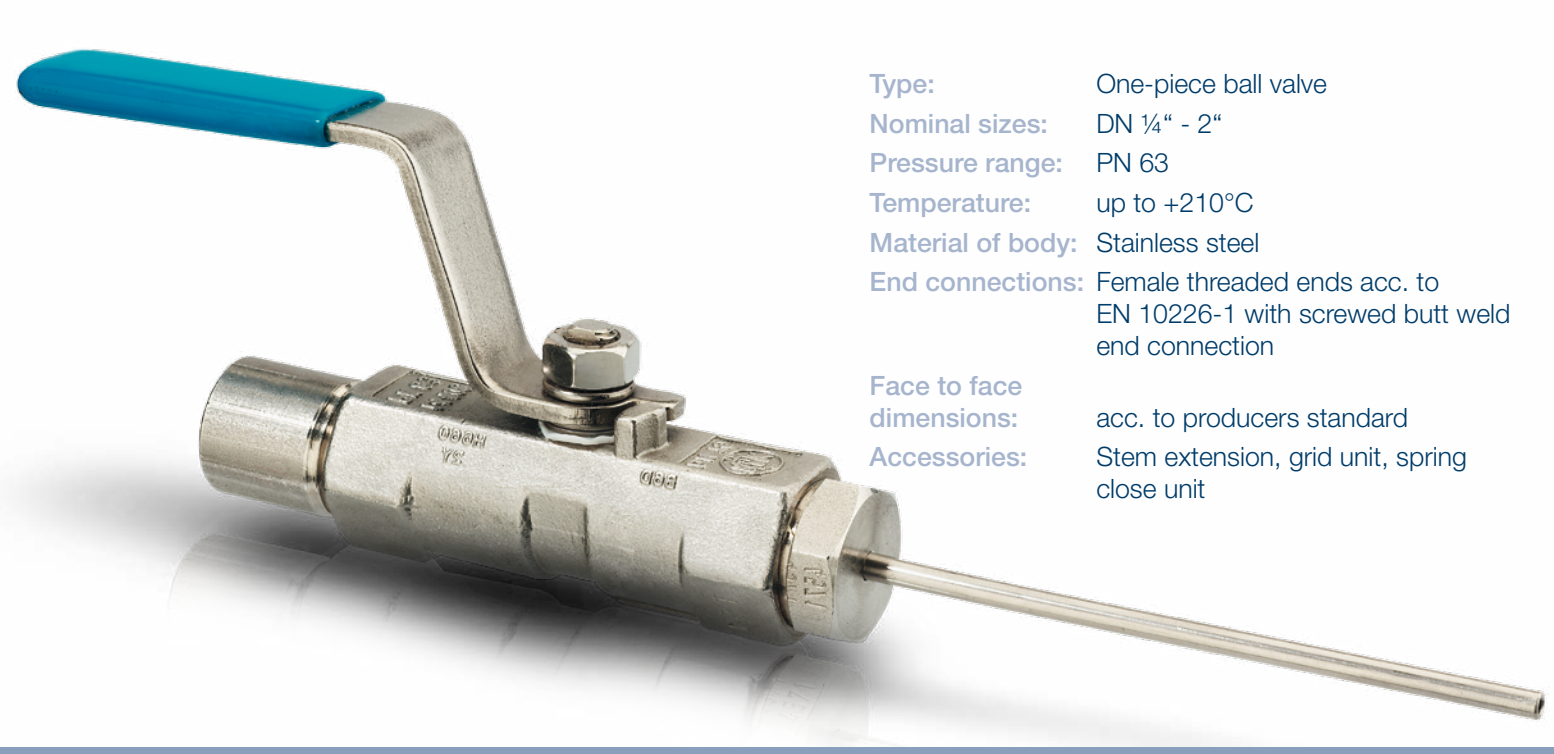

Type:	One-piece ball valve
Nominal sizes:	DN ¼“ - 2“
Pressure range:	PN 63
Temperature:	up to +210°C
Material of body:	Stainless steel
End connections:	Female threaded ends acc. to EN 10226-1 with screwed butt weld end connection
Face to face dimensions:	acc. to producers standard
Accessories:	Stem extension, grid unit, spring close unit

CERTIFICATES AND APPROVALS:

» ATEX 2014/34/EU

PRODUCT ADVANTAGES:

» Special designs for higher pressures and higher temperatures
» Special material combinations
» Available free of oil and grease
» Available with spring close unit to avoid wrong operation (open/close) by user

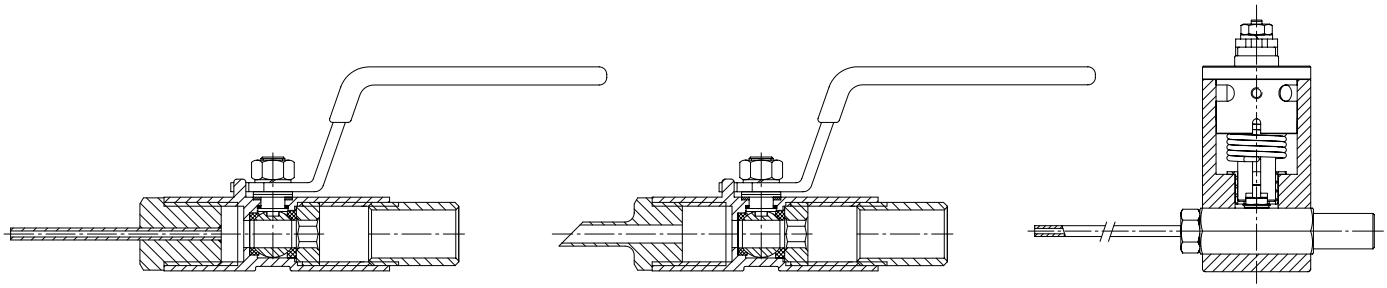

Type 300 P

Type 300 PS

Type 300 P with spring close unit Type 43

Sampling device ball valves Type 300 P	DN	PN	Temperature
Type 300 P female threaded ends acc. to EN 10226-1 with screwed butt weld end connection, sampling tube with 2mm inside diameter	¼“ - 2“	63	up to +210°C
Type 300 PS female threaded ends acc. to EN 10226-1 with screwed butt weld end connection, sampling tube with inclined dripping edge	¼“ - 2“	63	up to +210°C
Type 300 P with spring close unit Type 43 female threaded ends acc. to EN 10226-1 with screwed butt weld end connection, sampling tube with 2mm inside diameter, with spring close unit	¼“	63	up to +210°C

Material	Material of body
Stainless steel	1.4408

RK-PROBALL

An interesting alternative!

The RK-Proball series offers special interesting cost effectiveness. Depending on the design the ball valves are suitable in air pressure systems, light chemical industry, pulp and paper industry for alcalines, acids, solvents and other chemical agents.

RK-Proball ball valve NC-Types are certified acc. to German clean air act VDI 2440!

Flexible usability – a “Pro” for your plant.

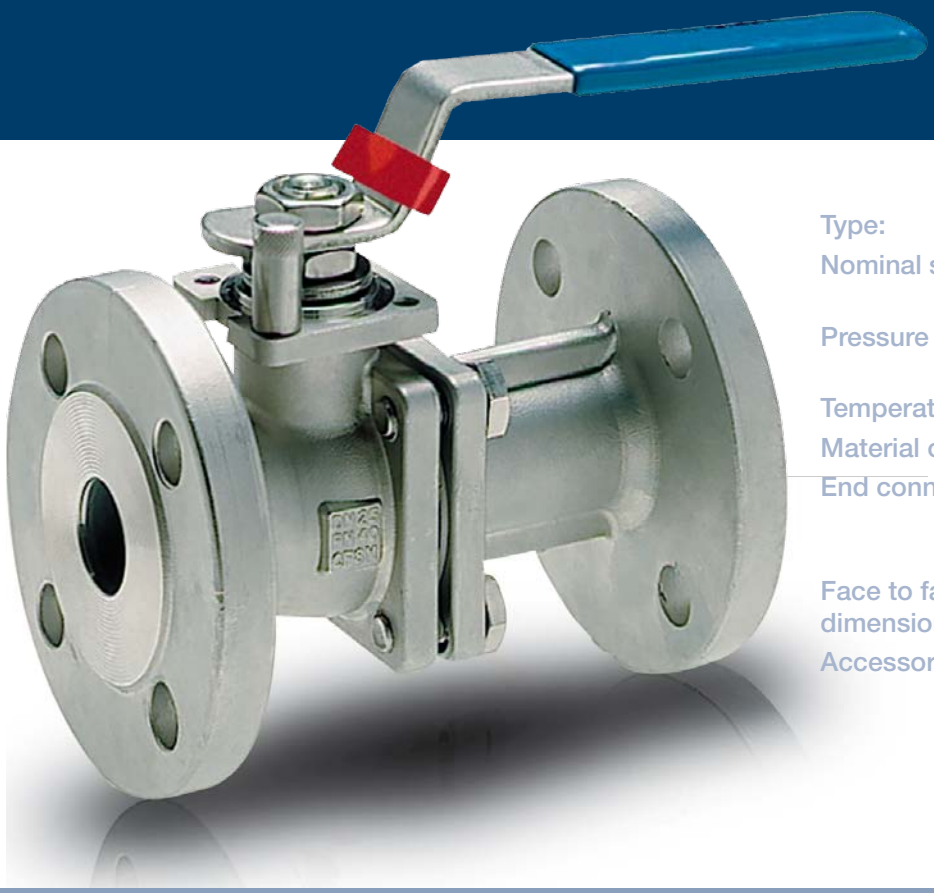

Type:	1-, 2- or 3-piece ball valves
Nominal sizes:	DN 15 - 100 DN ¼“ - 4“
Pressure range:	PN 16, PN 40, PN 63 and PN 100 ANSI Class 150 and Class 300
Temperature:	up to +250°C
Material of body:	Stainless steel, carbon steel
End connections:	Threaded ends, flanges, with pipe screwing light series, with clamping ring connection, butt weld ends
Face to face dimensions:	See relevant ball valve types
Accessories:	Safety spring locking device, locking device for lever, stem extension

CERTIFICATES AND APPROVALS:

- Certified acc. to German clean air act VDI 2440
- ATEX 2014/34/EU
- Fire-Safe acc. to API 607 (optional)

SPECIAL DESIGNS:

- Special materials on request

PRODUCT ADVANTAGES:

- Special interesting cost effectiveness
- Flexible usability
- Certified acc. to German clean air act VDI 2440
- Top flange DIN EN ISO 5211
- Available with safety spring locking device
- Best suited for automation

Ball valves RK-Proball	WSt	DN	PN	Temperature
Type KH 1T M, one-piece body threaded ends acc. to EN 10226-1 / EN ISO 228-1, face to face acc. to DIN 3202-M3, reduced bore	1]	¼“ - 2“	63	up to +220°C
Type KH 1T W, one-piece body flanges acc. to EN 1092, face to face acc. to producers standard, full bore	1]	½“ - 4“	16	up to +220°C
Type KH 2T M (NC) **, two-piece split body threaded ends acc. to EN 10226-1 / EN ISO 228-1, face to face acc. to DIN 3202-M3, full bore, certified acc. to German clean air act VDI 2440	1]	¼“ - 3“	40, 63	up to +225°C
Type KH 2T E **, two-piece split body with pipe screwing light series acc. to DIN 3861, face to face acc. to DIN 3202 V1, full bore	1]	6 - 16	63	up to +230°C
Type KH 2T K **, two-piece split body with clamping ring connection, face to face acc. to DIN 3202 V1, full bore	1]	4 - 16	63	up to +230°C
Type KH 2T K-HP **, two-piece split body with clamping ring connection, face to face acc. to DIN 3202 V1, top flange DIN EN ISO 5211, full bore, high-pressure	1]	4 - 16	160	up to +220°C
Type KH 2T F-FS **, two-piece split body flanges acc. to EN 1092, face to face acc. to EN 558, GR.1 / GR.27, top flange DIN EN ISO 5211, full bore, certified acc. to German clean air act VDI 2440, Fire-Safe acc. to API 607	1], 2]	15 - 100	16, 40	up to +225°C
Type KH 2T F-FS,** two-piece split body flanges acc. to ANSI B 16.5, face to face acc. to ANSI B 16.10, top flange DIN EN ISO 5211, full bore, certified acc. to German clean air act VDI 2440, Fire-Safe acc. to API 607	1], 2]	½” - 4”	Cl. 150, 300	up to +225°C
Type KH 3T M (NC) **, three-piece split body threaded ends acc. to EN 10226-1 / EN ISO 228-1, face to face acc. to DIN 3202-M3, top flange DIN EN ISO 5211, full bore, certified acc. to German clean air act VDI 2440	1], 2]	¼“ - 4“	63, 100	up to +225°C
Type KH 3T S (NC) **, three-piece split body butt weld ends acc. to EN 12627, face to face acc. to DIN 3202-S13, top flange DIN EN ISO 5211, full bore, certified acc. to German clean air act VDI 2440	1], 2]	¼“ - 4“	63, 100	up to +225°C
Type KH 3T SV (NC) **, three-piece split body extended butt weld ends acc. to EN 12627, face to face acc. to producers standard, top flange DIN EN ISO 5211, full bore, certified acc. to German clean air act VDI 2440	1], 2]	½“ - 4“	63, 100	up to +225°C
Type KH 3T F (NC) **, three-piece split body flanges acc. to EN 1092, face to face acc. to EN 558, GR.1, top flange DIN EN ISO 5211, full bore, certified acc. to German clean air act VDI 2440	1], 2]	15 - 100	16, 40	up to +225°C
Type KH 3W M, three-way ball valve threaded ends acc. to EN 10226-1 / EN ISO 228-1, face to face acc. to producers standard, reduced bore	1]	¼“ - 2“	40, 63	up to +230°C

** safety spring locking device is optional

Material	Material of body	
	DIN (EN)	ANSI
Stainless steel 1]	1.4408	ASTM A351-CF8M
Cast steel 2]	1.0619	ASTM A216 WCB

CHEMOBALL KH2F-CI

Ball valve for application in chemical industry.

Ball valve Chemoball-CI, the technical advancement of the RK-Chemoball series, offers highest technology and newest materials.



Type:	2-piece flanged ball valve
Nominal sizes:	DN 15 - 100
Pressure range:	PN 16 and PN 40
Temperature:	up to +225°C
Material of body:	Stainless steel, cast steel
End connections:	Flanges acc. to EN 1092
Face to face dimensions:	acc. to EN 558, GR.1 and GR.27
Accessories:	Locking device for hand lever, stem extension, stem extension with safety stuffing box, heating jacket

CERTIFICATES AND APPROVALS:

- Certified acc. to German clean air act VDI 2440, 60,000 cycles -10°C up to +225°C
- Fire-Safe acc. to API 607 and DIN EN ISO 10497
- Classification acc. to SIL 2
- ATEX 2014/34/EU
- Type-test approval mark No. TÜV.A.318-15

PRODUCT ADVANTAGES:

- Approvals acc. to virtually regulations
- Wide field of applications
- Temperature range from -10°C up to +225°C
- Low torques for economical automatisation
- Clearance volume minimized
- Top flange DIN EN ISO 5211
- Certified acc. to German clean air act VDI 2440
- Wide range of sealing materials:
  - KFM
  - KFGN (nitrogenium sintered)
  - KFCM (for steam application)

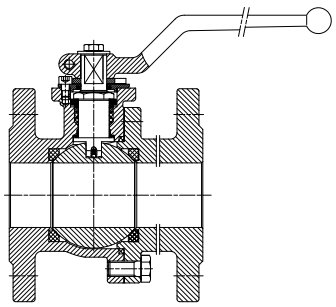

Face to face acc. to EN 558, GR.27

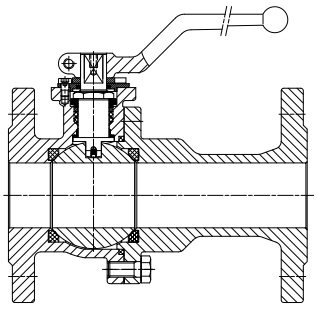

Face to face acc. to EN 558, GR.1

Series Chemoball KH2F-CI	DN	PN	Temperature
Type KH2F-CI-FS floating ball, soft seated, top flange DIN EN ISO 5211, full bore, Fire-Safe acc. to API 607 and DIN EN ISO 10497	15 - 100	16, 40	up to +225°C

Material	Material of body
Stainless steel	1.4408
Carbon steel	1.0619

MIG-KS ACTUATORS

Pneumatic Rack & Pinion actuators – Type MIG-KS

The actuator concept for the challenges of tomorrow!

This totally new actuator concept sets new standards in performance and energy management. Up to 40% higher torque with same or smaller construction size and from 40% up to 60% less air consumption compared with the contention.
The pneumatic Rack & Pinion actuators, type MIG-KS, revolutionise the control of butterfly valves, ball valves and plug valves.

ADVANTAGE FEATURES:

- Pistons are guided with rods
- Additional piston guide belts
- Consistent torque process
- Suitable for high operation cycles
- Integral and exterior air supply with very large diameter
- No slip-stick effect
- Optimum piston area to pressure ratio
- Significant increase of performance and torque
- Considerably improved efficiency
- Significantly shorter actuation / reaction times
- 40% to 60% less air consumption
- No specialised version is needed for quick acting requirement
- Anti blow out stop screws
- Rotation angle with +/- 5° adjustable in every end position
- Less wear and tear while longer life span
- Complete assembly/disassembly only with two hexagon bolts
- Maintenance free and easy to assemble

OPTIONAL:

- Double stroke adjustment
- Mechanical partial-stroke test
- Safety block for end positions
- 90° standard actuators with extended rotation to 100°
- Reversal of rotation direction
- Direct assembly of positioning and control units acc. to VDI/VDE 3847
- All types of contactless limit switches can be directly integrated in the body as an additional option or as a replacement for a typical limit switch box.



CERTIFICATES AND APPROVALS:

- Certified acc. to DIN EN ISO 9001:2015
- Certified acc. to PED 2014/68/EU, Module H and H1
- Installation declaration of an incomplete machine as per MR 2006/42/EC
- EC declaration of conformity as per ATEX guideline 2014/34/EU Protection type EX II 2GD Tmax. = 95°C
- Manufacturer's declaration of conformity as per IEC 61508 / IEC 61511 Minimum requirement SIL 2
- Type test as per NAMUR NE95 carried out by Bilfinger Maintenance Süd GmbH.
  The endurance test was carried out with 500,000 switching cycles against load and at -20°C to +80°C and durability was thus verified.

TECHNICAL DATA

Design:

» Pneumatic Rack & Pinion actuators in double action and single action (spring-return mechanism) executions

Construction features:

» Rack and pinion principle, piston drive via guide rods and slip bands

Rotation angle:

» 90° and +/-5° per end position

Operating pressure:

» min. 1.5 bar up to max. 10 bar

Control medium:

» Compressed air acc. to ISO 8573-1 7-5-4, pressure dew point min. 10°C under operating temperature as well as all non-aggressive gaseous media (oily and dry).

Lubrication:

» Factory set constant lubrication for normal working life of the actuator

Operating temperature:

» -25°C to + 80°C standard
» -50°C to + 80°C optional low temperature design
» -20°C to +140°C optional high temperature design

Torque range:

» 14 models for optimum torque gradation. Torque from 10 Nm to 2,000 Nm.

Mounting position:

» Any as required

IP-Protection:

» min. IP-67

Resistance to corrosion:

» Industrial atmosphere
» Commercial fuels, brake fluid, oils and solvents
» Salt water
» Acids > pH 4
» Alkalinity < pH 9
» Resistant when mechanically stressed

Applied norms:

» DIN EN ISO 5211
» DIN 3337
» DIN EN 15714-3:2010
» VDI/VDE 3845
» VDI/VDE 3847
» NAMUR NE 95
» MR 2006/42/EG
» 2014/34/EU - ATEX 100a
» DIN EN ISO 9227
» ISO 8573-1:2012
» EN13463-1:2009
» EN 13463-5:2011
» DIN EN 1127-1
» EN ISO 12100:2010

Maintenance and inspection:

» The MIG-KS actuators are maintenance free
» Prerequisites for this are:
- Professional actuator construction
- Appropriate control medium
- Normal environmental conditions
- Proper use

AUTOMATED BALL VALVES

As renowned manufacturer of ball valves we also offer our customers the complete set of control elements consisting of:

» Ball valve
» Stem extension
» Bracket
» Coupling
» MIG-KS actuator
» Solenoid valve
» Switch box

as appropriate to your application and specification. To ensure fast and secure automation of our ball valves we can offer you standardised automation packages (as listed above). We keep the necessary components for this in stock.

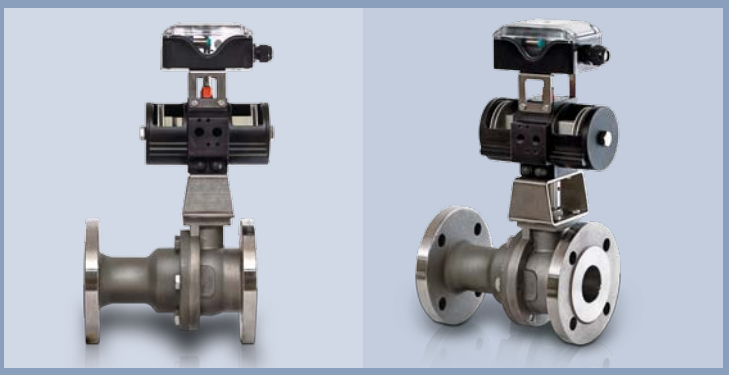

RK-NEEDLE VALVES

Miniplant valve for generally applications.

With conventional stuffing box or bellow sealed and safety stuffing box a good solution with clamping ring connection for your miniplant or measurement application.



Type:	High-pressure needle valve
Nominal sizes:	DN 4 - 10
Pressure range:	PN 250 and PN 315
Temperature:	up to +500°C
Material of body:	Stainless steel
End connections:	With clamping ring connection
Face to face dimensions:	acc. to producers standard
Accessories:	Stem extension

SPECIAL DESIGNS:

- Special materials like Titan, Hastelloy etc.
- Soft seated or metal seated
- Stuffing box made of Graphite or PTFE
- With female threaded ends
- With male threaded ends
- Male/female variation
- Light series acc. to DIN 3861
- NPT-thread

PRODUCT ADVANTAGES:

- Compact design
- Compatible with current clamping ring connection manufacturers
- One-piece solid body
- TA-Luft design with bellow and safety stuffing box

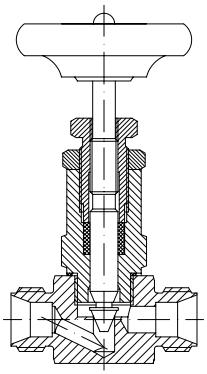

NVK-HP

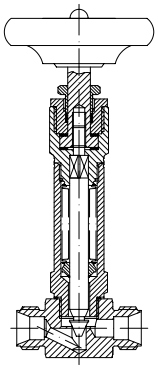

NVFK-HP

High-pressure needle valves	DN	PN	Temperature
Type NVK-HP with stuffing box	4 - 10	315	up to +500°C
Type NVFK-HP bellow sealed and stuffing box	4 - 10	250	up to +500°C

Material	Material of body
Stainless steel	1.4571/1.4404

NOTES

SAMPLE OF APPLICATIONS



Steam ball valve INTEC K204-S-D

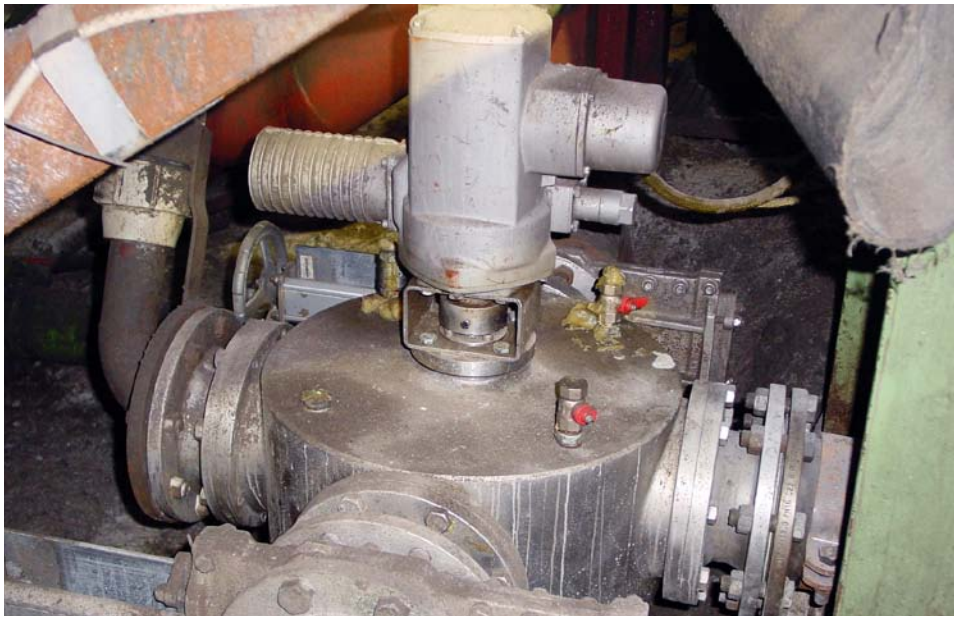

Multiple way ball valve INTEC K411-S with X-bore



KLINGER Piston valve Type KVN



Air header INTEC with 20 outlet ports and
RK-Proball Type KH2T K

General information

The specified pressure and temperature values showing the maximum range for orientation only.
For the necessary design please ask for our pT-diagram.

Material code information

Main criterion of the material code is the basic material of body and cap.

Automation

All KLINGER Schöneberg ball valves are available with electrical or pneumatical actuators.

Please ask for your selective solution.

Our experts will be pleased to advice you:

Phone: +49-6126-950-0
Fax: +49-6126-950-341
sales@klinger-schoeneberg.de
www.klinger-schoeneberg.de

KLINGER trusted. worldwide.

Distribution partner:

Subject to technical modification.
02/2018

KLINGER Sweden AB
Head office:
Kontovägen 3
175 62 JÄRFÄLLA, Sweden
Phone +46 10 199 87 00
info@klinger.se